PORTUGAL

EN

SIGMA X

USER / INSTALLER'S MANUAL

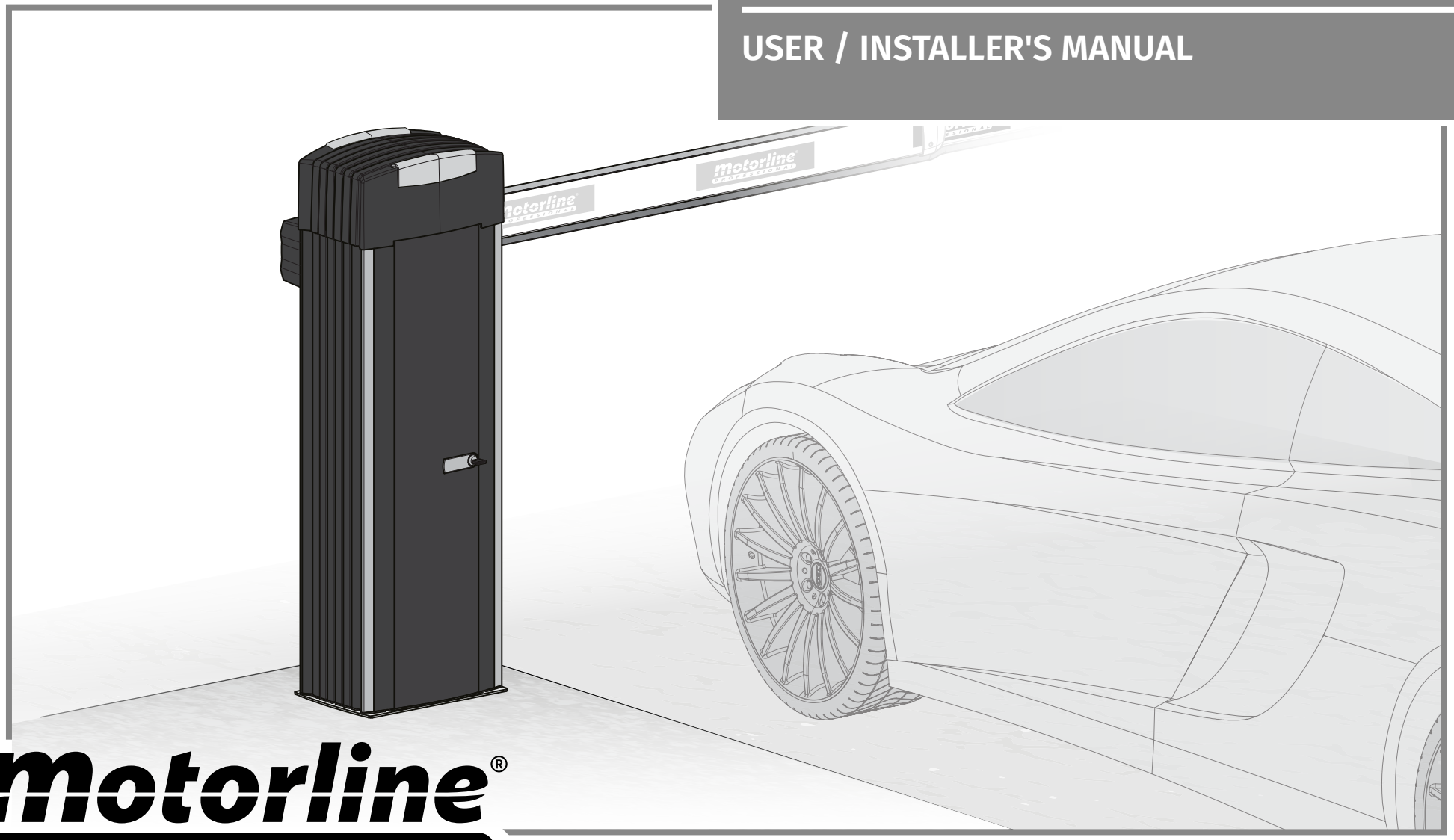

Motorline®
PROFESSIONAL

v1.2
REV. 08/2022

00. CONTENT

INDEX

01. SAFETY INSTRUCTIONS

ATENTION:

CE	This product is certified in accordance with European Community (EC) safety standards.
RoHS	This product complies with Directive 2011/65/EU of the European Parliament and of the Council, of 8 June 2011, on the restriction of the use of certain hazardous substances in electrical and electronic equipment and with Delegated Directive (EU) 2015/863 from Commission.
	(Applicable in countries with recycling systems). This marking on the product or literature indicates that the product and electronic accessories (eg. Charger, USB cable, electronic material, controls, etc.) should not be disposed of as other household waste at the end of its useful life. To avoid possible harm to the environment or human health resulting from the uncontrolled disposal of waste, separate these items from other types of waste and recycle them responsibly to promote the sustainable reuse of material resources. Home users should contact the dealer where they purchased this product or the National Environment Agency for details on where and how they can take these items for environmentally safe recycling. Business users should contact their vendor and check the terms and conditions of the purchase agreement. This product and its electronic accessories should not be mixed with other commercial waste.
	This marking indicates that the product and electronic accessories (eg. charger, USB cable, electronic material, controls, etc.) are susceptible to electric shock by direct or indirect contact with electricity. Be cautious when handling the product and observe all safety procedures in this manual.

01. SAFETY INSTRUCTIONS

GENERAL WARNINGS

- This manual contains very important safety and usage information. Read all instructions carefully before beginning the installation/usage procedures and keep this manual in a safe place that it can be consulted whenever necessary.
- This product is intended for use only as described in this manual. Any other enforcement or operation that is not mentioned is expressly prohibited, as it may damage the product and put people at risk causing serious injuries.
- This manual is intended firstly for specialized technicians, and does not invalidate the user's responsibility to read the "User Norms" section in order to ensure the correct functioning of the product.
- The installation and repair of this product may be done by qualified and specialized technicians, to assure every procedure are carried out in accordance with applicable rules and norms. Nonprofessional and inexperienced users are expressly prohibited of taking any action, unless explicitly requested by specialized technicians to do so.
- Installations must be frequently inspected for unbalance and the wear signals of the cables, springs, hinges, wheels, supports and other mechanical assembly parts.
- Do not use the product if it is necessary repair or adjustment is required.
- When performing maintenance, cleaning and replacement of parts, the product must be disconnected from power supply. Also including any operation that requires opening the product cover.
- The use, cleaning and maintenance of this product may be carried out by any persons aged eight years old and over and persons whose physical, sensorial or mental capacities are lower, or by persons without any knowledge of the product, provided that these are supervision and instructions given by persons with experienced in terms of usage of the product in a safe manner and who understands the risks and dangers involved.
- Children shouldn't play with the product or opening devices to avoid the motorized door or gate from being triggered involuntarily.

WARNINGS FOR TECHNICIANS

- Before beginning the installation procedures, make sure that you have all the devices and materials necessary to complete the installation of the product.
- You should note your Protection Index (IP) and operating temperature to ensure that is suitable for the installation site.
- Provide the manual of the product to the user and let them know how to handle it in an emergency.
- If the automatism is installed on a gate with a pedestrian door, a door locking mechanism must be installed while the gate is in motion.
- Do not install the product "upside down" or supported by elements do not support its weight. If necessary, add brackets at strategic points to ensure the safety of the automatism.
- Do not install the product in explosive site.
- Safety devices must protect the possible crushing, cutting, transport and danger areas of the motorized door or gate.
- Verify that the elements to be automated (gates, door, windows, blinds, etc.) are in perfect function, aligned and level. Also verify if the necessary mechanical stops are in the appropriate places.
- The central must be installed on a safe place of any fluid (rain, moisture, etc.), dust and pests.
- You must route the various electrical cables through protective tubes, to protect them against mechanical exertions, essentially on the power supply cable. Please note that all the cables must enter the central from the bottom.
- If the automatism is to be installed at a height of more than 2,5m from the ground or other level of access, the minimum safety and health requirements for the use of work equipment workers at the work of Directive 2009/104/CE of European Parliament and of the Council of 16 September 2009.
- Attach the permanent label for the manual release as close as possible to the release mechanism.

01. SAFETY INSTRUCTIONS

- Disconnect means, such as a switch or circuit breaker on the electrical panel, must be provided on the product's fixed power supply leads in accordance with the installation rules.
- If the product to be installed requires power supply of 230Vac or 110Vac, ensure that connection is to an electrical panel with ground connection.
- The product is only powered by low voltage satefy with central (only at 24V motors)

WARNINGS FOR USERS

- Keep this manual in a safe place to be consulted whenever necessary.
- If the product has contact with fluids without being prepared, it must immediately disconnect from the power supply to avoid short circuits, and consult a specialized technician.
- Ensure that technician has provided you the product manual and informed you how to handle the product in an emergency.
- If the system requires any repair or modification, unlock the automatism, turn off the power and do not use it until all safety conditions have been met.
- In the event of tripping of circuits breakers of fuse failure, locate the malfunction and solve it before resetting the circuit breaker or replacing the fuse. If the malfunction is not repairable by consult this manual, contact a technician.
- Keep the operation area of the motorized gate free while the gate in in motion, and do not create strength to the gate movement.
- Do not perform any operation on mechanical elements or hinges if the product is in motion.

RESPONSABILITY

- Supplier disclaims any liability if:
  - Product failure or deformation result from improper installation use or maintenance!
  - Safety norms are not followed in the installation, use and maintenance of the product.
  - Instructions in this manual are not followed.
  - Damaged is caused by unauthorized modifications
  - In these cases, the warranty is voided.

MOTORLINE ELECTROCELOS SA.
Travessa do Sobreiro, nº29
4755-474 Rio Côvo (Santa Eugénia)
Barcelos, Portugal

SYMBOLS LEGEND:


- Important safety notices


- Useful information


- Programming information


- Potentiometer information


- Connectors information


- Buttons information

TECHNICAL CHARACTERISTICS

SIGMA X is an electromechanical barrier designed to control vehicle access to private, industrial or commercial areas.

Automatism technical specifications:

	4M	6M
• Power	150W	
• Barrier power	110/230Vac 50/60Hz	
• Motor voltage	24Vdc	
• Noise	LpA <= 50dB (A)	
• Operating Temperature	-25°C to 55°C	
• Protection Class	IP55	
• Working Frequency	80%	
• Rotational Speed	4,6 RPM	3,5 RPM
• Opening / Closing Time	4,5 seconds	6 seconds

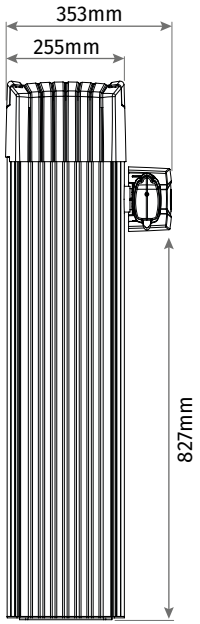

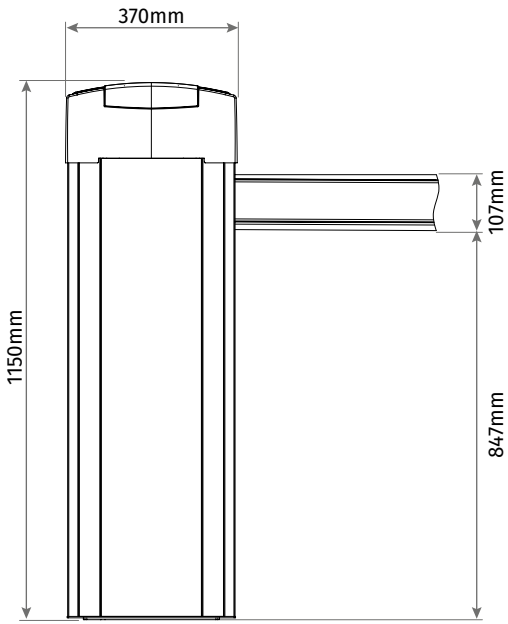

COMPONENTS

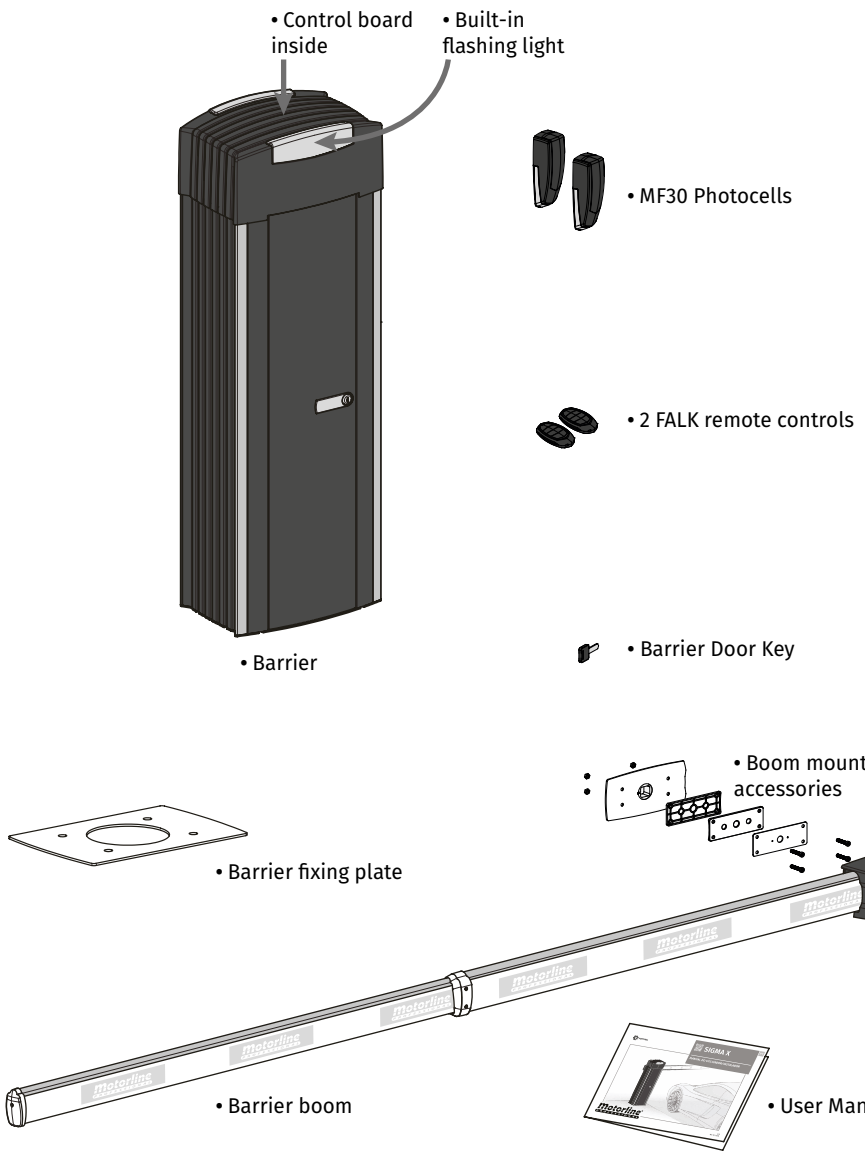

* The components shown may not be part of the standard kit.

FLASHING LIGHT

This barrier has two RGB flashing light integrated in the top cover, for emission of red, green and blue colors.
These colors are used to signal different barrier states more clearly.

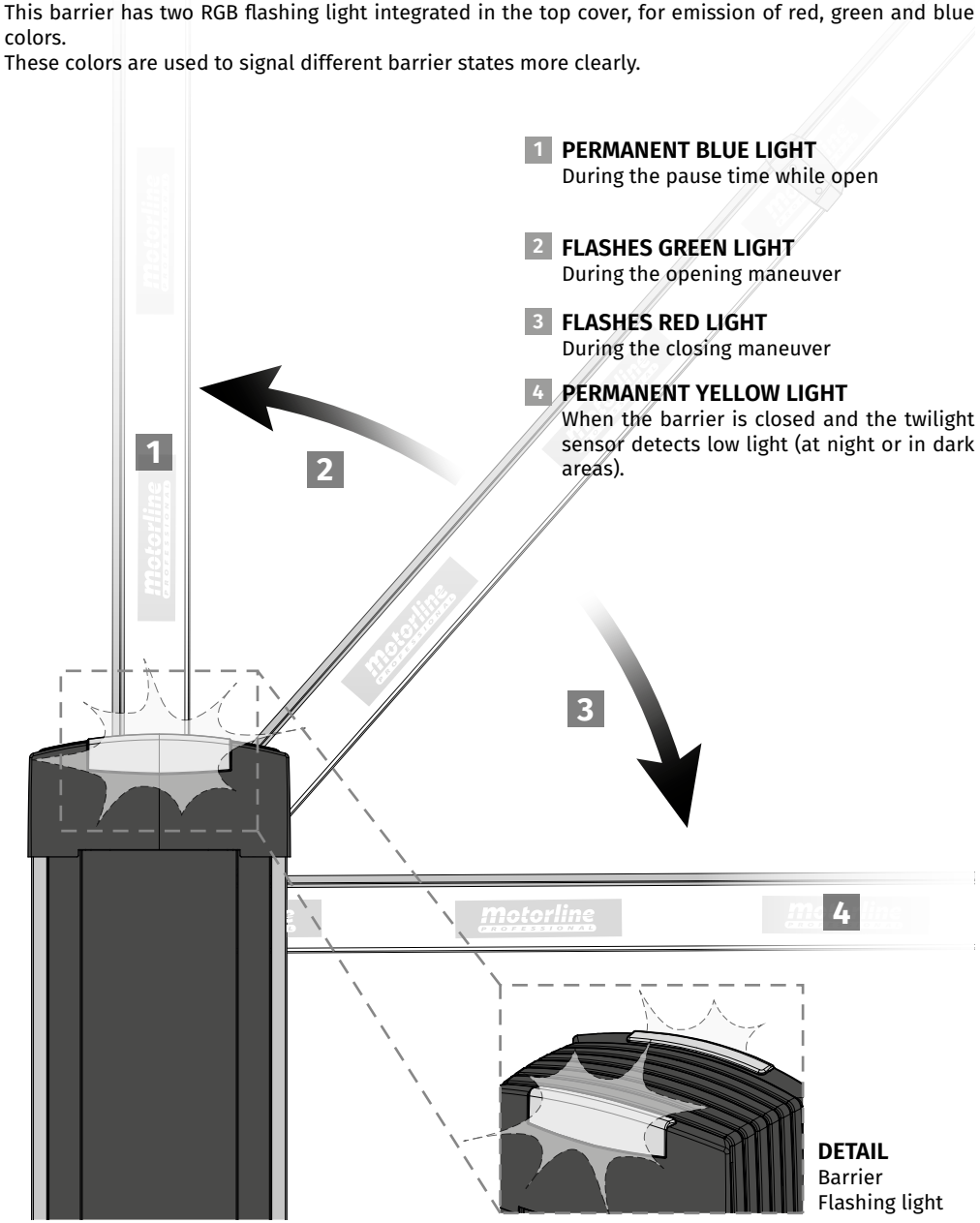

1 **PERMANENT BLUE LIGHT**
During the pause time while open

2 **FLASHES GREEN LIGHT**
During the opening maneuver

3 **FLASHES RED LIGHT**
During the closing maneuver

4 **PERMANENT YELLOW LIGHT**
When the barrier is closed and the twilight sensor detects low light (at night or in dark areas).

DETAIL
Barrier
Flashing light

MANUAL OPENING / CLOSING

In an emergency or during the barrier installation / adjustment phase, it may be necessary to move the boom manually. To manually open / close the barrier, follow the instructions below:

Under no circumstances should you put your hands on the movement axis of the motor and springs when the barrier is connected to the power supply.

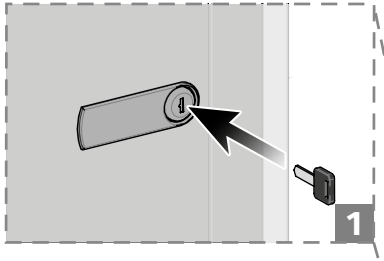

1 **OPEN DOOR**
Insert the key into the barrier lock and turn it 90° to open the door.

2 **UNLOCK THE BARRIER**
With the barrier locked, push the crank in, turn 65 ° to the left and release so that the crank goes down to the unlocked position.

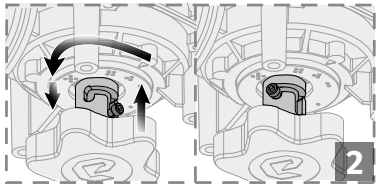

3 **UP / DOWN BOOM**
With the motor in the unlocked position, simply turn the crank to raise or lower the boom.

4 **BLOCK THE BARRIER**
With the barrier unlocked, push the crank inwards, turn 65 ° to the right and release so that the crank descends to the locked position.

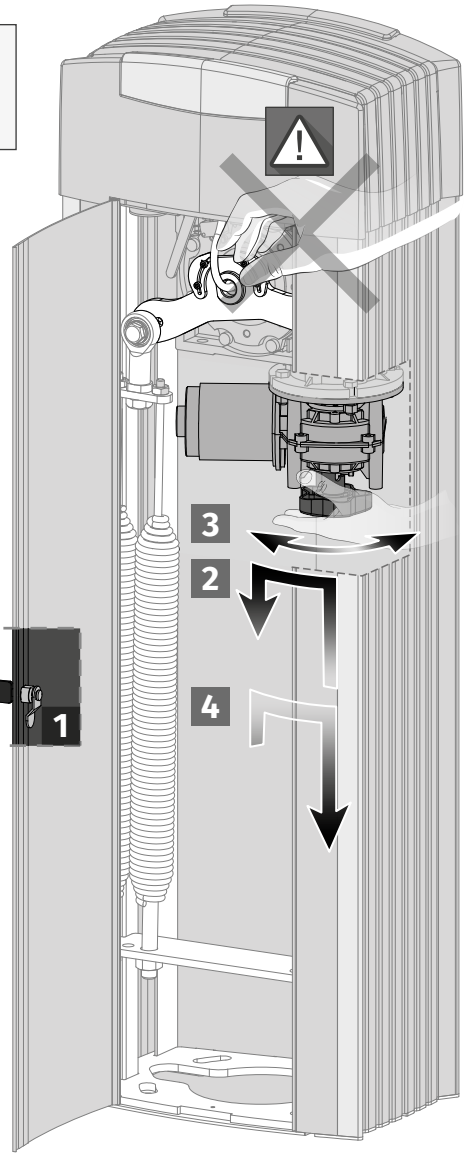

03. INSTALLATION

INSTALLATION MAP

1 • SIGMA X
2 • Boom
3 • Boom Extension
4 • Photocell support column (not included)
5 • Photocell
6 • Built-in Flashing Light
7 • Control Board
8 • Cover Unlocker
9 • Barrier Cover
10 • Transformer
11 • Manual movement handle
12 • Motor
13 • Spring(s)
14 • Spring support plate
15 • Mounting plate
16 • Fixed Boom Support

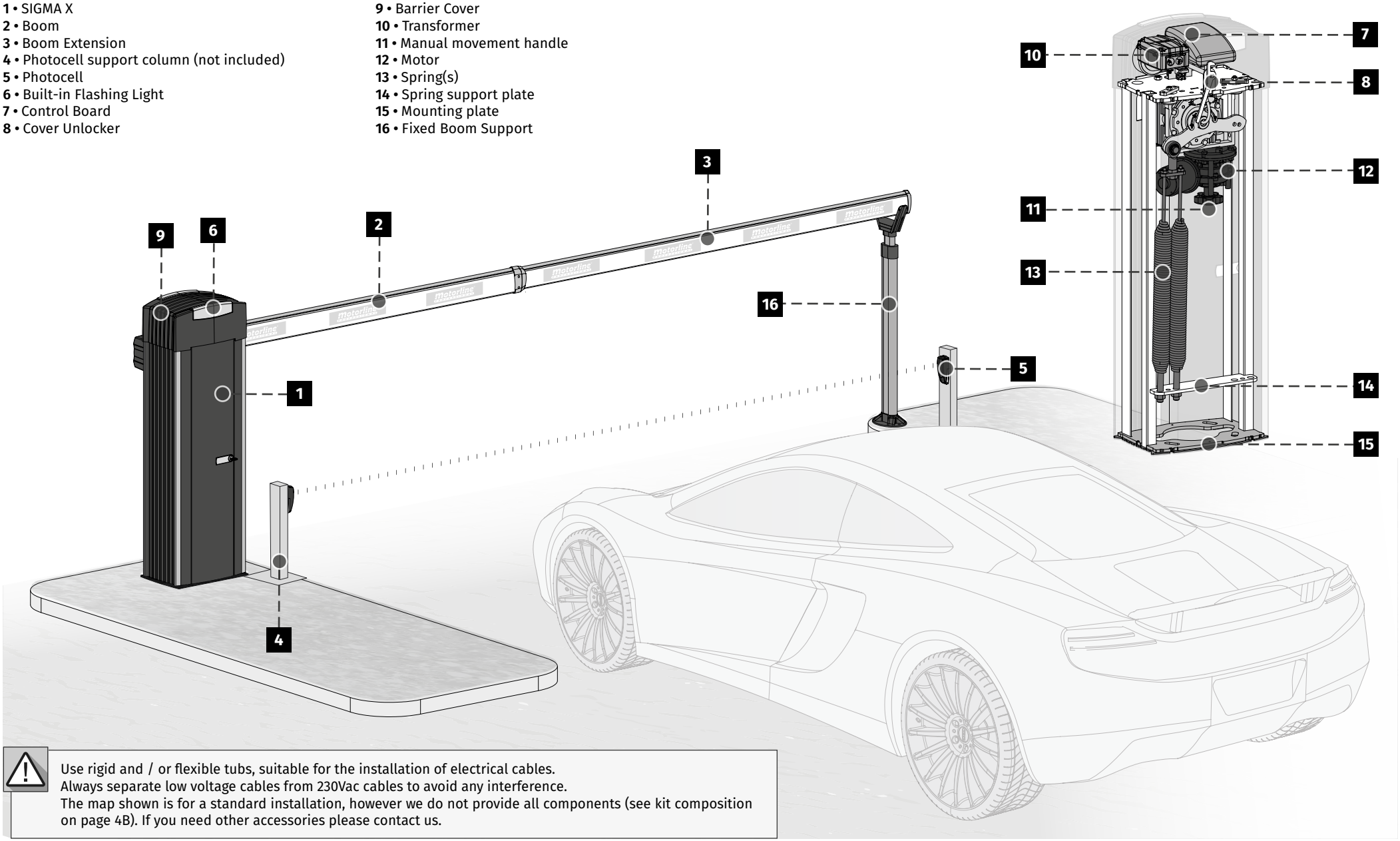

Use rigid and / or flexible tubs, suitable for the installation of electrical cables.
Always separate low voltage cables from 230Vac cables to avoid any interference.
The map shown is for a standard installation, however we do not provide all components (see kit composition on page 4B). If you need other accessories please contact us.

REMOVE COVER AND PROFILES

This barrier allows free access to the interior to facilitate the product installation and maintenance process. To do so, remove the aluminum cover and profiles from the barrier.

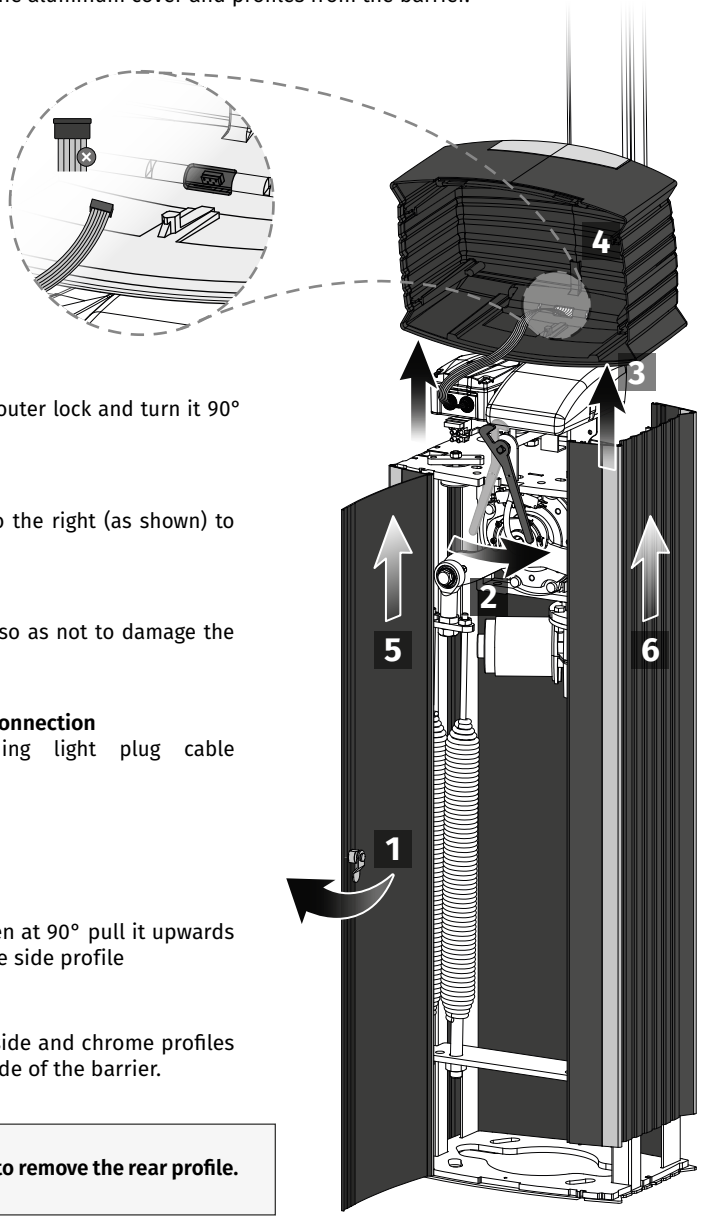

• REMOVE COVER

1 **Open the door**
Insert the key into the outer lock and turn it 90° to open the door.

2 **Unlock cover**
Move the cover lever to the right (as shown) to unlock the cover.

3 **Remove cover**
Lift the cover carefully so as not to damage the connecting cables.

4 **Turn off flashing light connection**
Disconnect the flashing light plug cable integrated in the cover.

• REMOVE PROFILES

5 **Remove door**
With the door fully open at 90° pull it upwards until it comes out of the side profile

6 **Remove Side Profiles**
Do the same with the side and chrome profiles to fully release the inside of the barrier.

It is not necessary to remove the rear profile.

FOUNDATION

• CREATE FOUNDATION

1 Drill a hole of 355x470mm and 400mm (or greater) deep to create the fixing foundation.

2 Fill with concrete and smooth the top.

3 Apply the motor mounting plate to the foundation with the cement still fresh (see page 8).

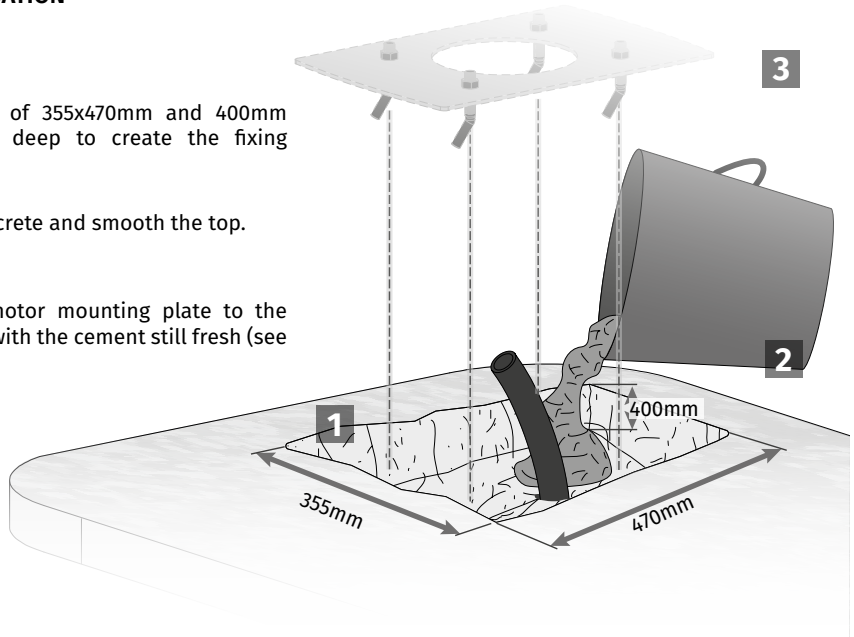

• EXISTING FOUNDATION

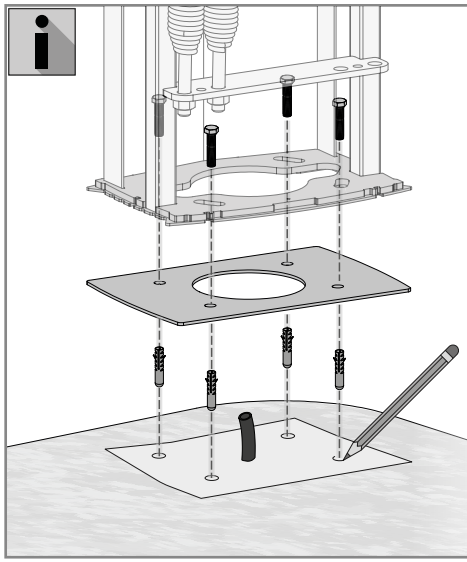

*If you already have a foundation created, proceed as follows:

1 Using the mounting plate, mark the holes in the foundation.
Puncture the foundation at these markings and apply appropriate wall plugs to secure the barrier.

2 Frame the mounting plate with the floor holes.

3 Place the barrier on the floor mounting plate, aligning the two with the holes in the foundation.

4 Secure the barrier to the foundation with screws from the inside so that it is fully fixed and level.

AUTOMATISM INSTALLATION

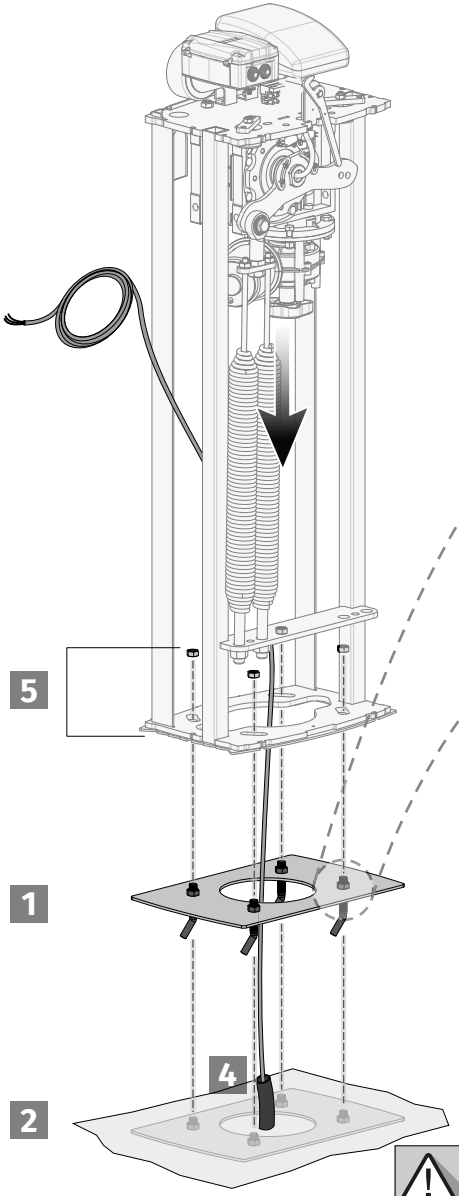

1 Mount the bolts and screws to the mounting plate as exemplified in step 1.

2 With the cement still fresh, apply the fixing plate so that the bolts and the female studs enter at least 65mm into the cement.
**If you are installing the barrier on an existing foundation, bolt the mounting plate to the floor using screws and dowels as shown on page 7B (not supplied in the kit).*

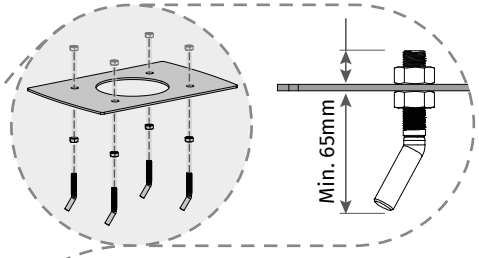

3 Using a level, make sure the plate is perfectly horizontal.
Once the cement has dried, remove the upper females to apply the barrier.

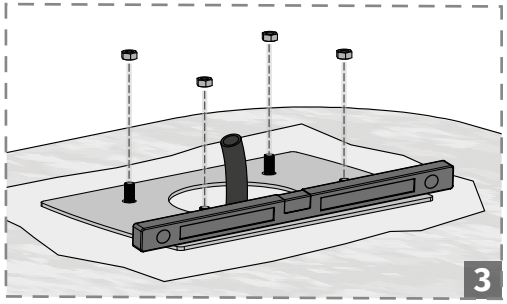

CEMENT MUST BE FRESH IN STEPS 1 AND 2

4 Route the electrical cables to connect the motor to the accessories and power supply. Leave cables of a length that ensures easy connection to the control board at the top of the barrier.

5 Position the barrier on the plate leaving it centered and secure it by tapping the screws inside the barrier.

• ADJUST BARRIER POSITION

**Once fixed at the ground, the SIGMA X is ready to allow a position adjustment of a few millimeters. Adjustment is made by rotating the barrier in relation to its center.*

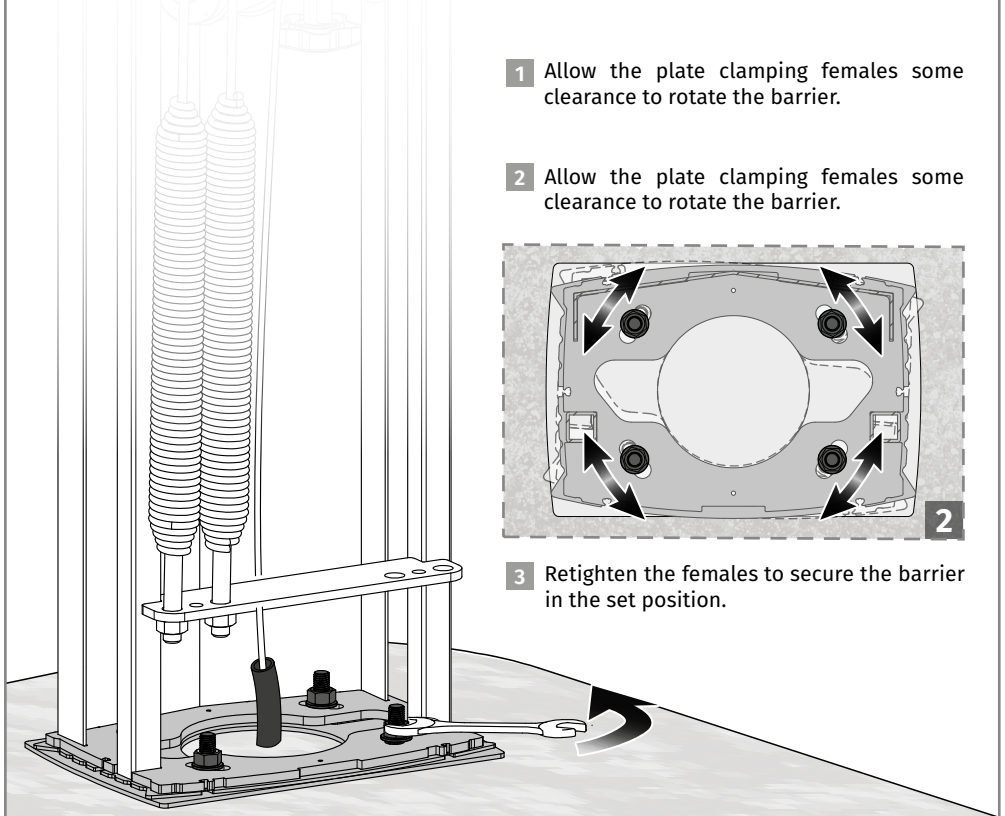

1 Allow the plate clamping females some clearance to rotate the barrier.

2 Allow the plate clamping females some clearance to rotate the barrier.

3 Retighten the females to secure the barrier in the set position.

This adjustment should be done only when the foundation cement is dry to prevent barrier dislocation.

SPRING DIRECTION

LEFT BOOM

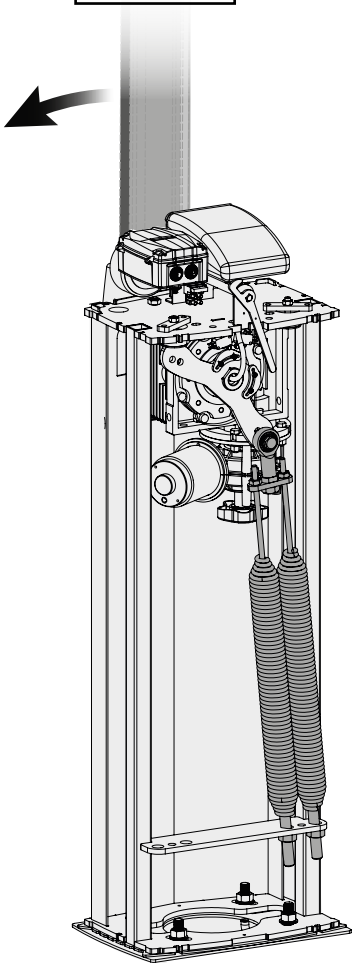

- **Springs on the right side**

RIGHT BOOM

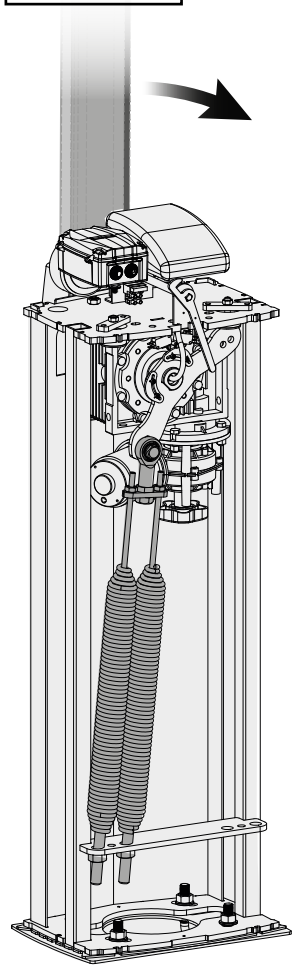

- **Springs on the left side**

If you order the SIGMA X without specifying the position of the boom, it will be mounted on the right (DX).
If the boom is not in the desired position, follow the instructions on page 10 to reverse the opening / closing direction.

SPRING POSITION

SIGMA - X6

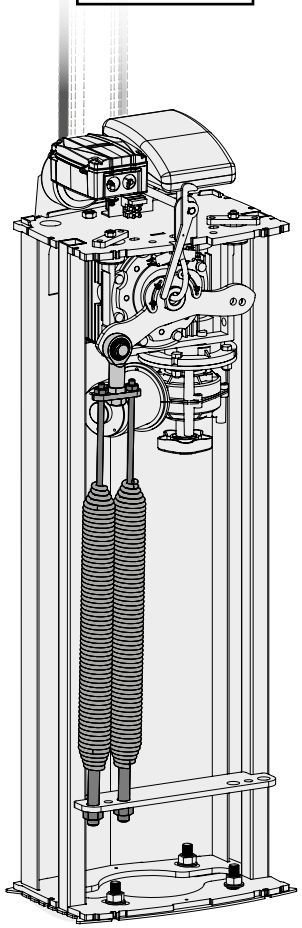

- **2 Springs**
- **M8 screws at the top (tighten on the joint bearing plate)**
- **M16 screws at the bottom (tighten in the large holes in the structure plate)**

SIGMA - X4

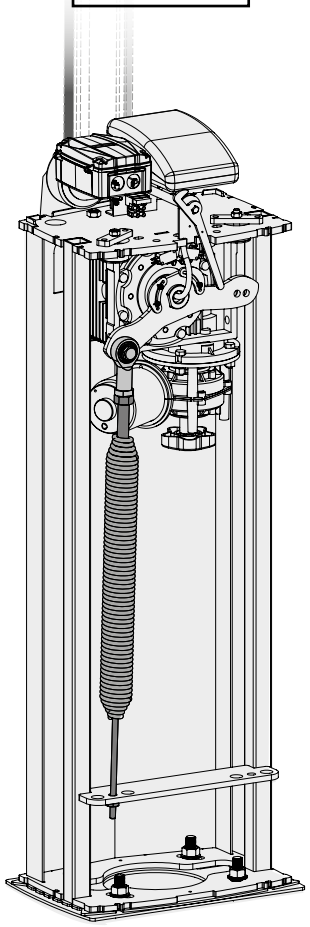

- **1 Spring**
- **M16 screw on top (tighten directly on the joint bearing)**
- **M8 screw at the bottom (tighten in the small hole in the structure plate)**

If you order the SIGMA X for a 6 meter boom (SIGMA - X6) it will be mounted with 2 springs.
If it is for a 4 meter boom (SIGMA - X4) follow the instructions on page 10 to change to 1 spring.

EXCHANGE 2 SPRINGS FOR 1 SPRING

If the springs are on the wrong side for the desired boom direction (see diagram on page 9A), the position of the springs on the rotation lever must be reversed.

To do this, you will need to:
1 · Unscrew the springs of the two support points;
2 · Retighten them on the opposite side, respecting the tuning table on page 14.

Whenever you do this process, you should check the connections of the motor to the control board, according to the diagram on page 18.

• REMOVE THE LEVER SPRINGS

1 Loosen the screw nut at the rear the lever.

2 Loosen the screw and washers that secure the joint bearing to the lever.

3 Loosen the tuning females (bottom)

• REVERSE SPRINGS

4 Attach the spring joint to the opposite side of the lever, tightening all components with the main screw, and then lock with the female behind the lever.

5 Attach the springs to the bottom plate, through the females.

When attaching the kneecap, you must put it in the appropriate hole for the size of the boom you are going to use (see table on page 14).

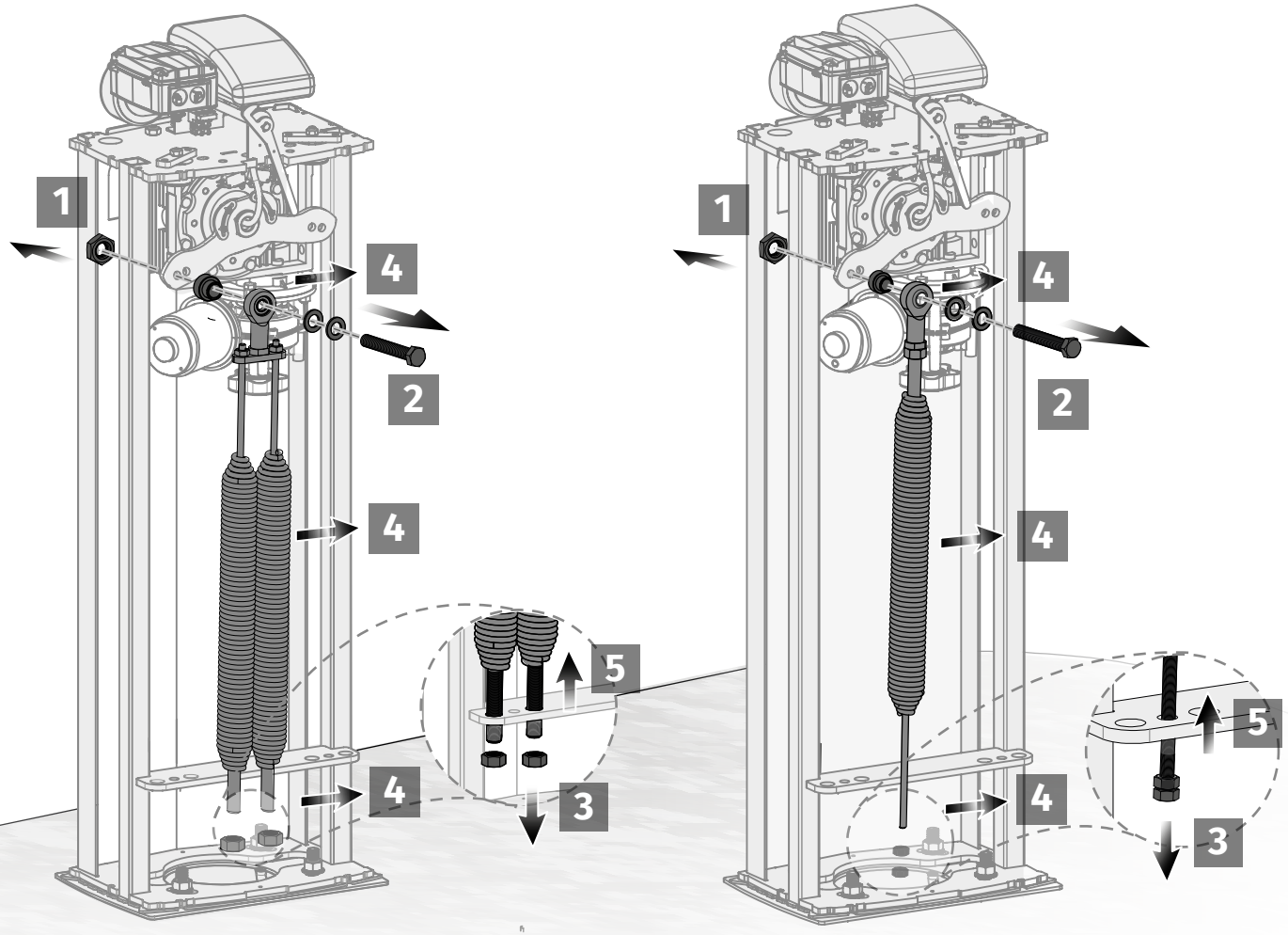

• REVERSE MOTOR CONNECTIONS

6 Check the connections of the motor wires to the control board (see control board manual)

BOOM MOUNTING

1

• **REVERSE BOOM SUPPORT**

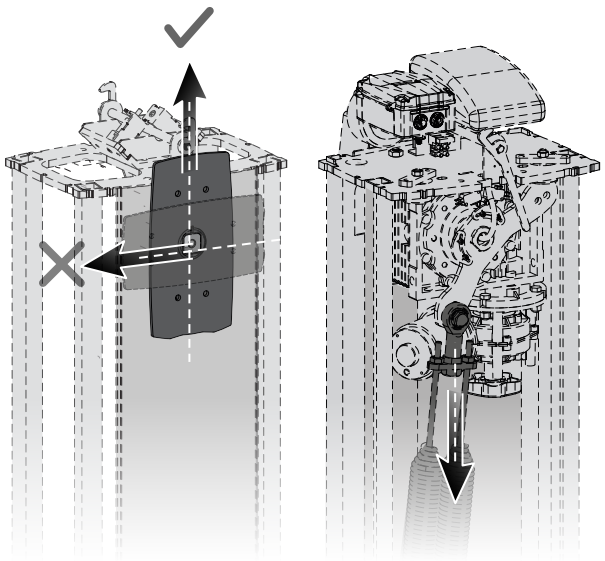

• **Vertical plate**

Before assembling the boom, check that:
- springs are down (no tension)
- boom support is vertical

If the springs are up (stretched), you can lower them using the hand crank (see page 5B)

If this does not happen, the boom support must be rotated:

A • Loosen the boom support screws and disengage the shaft;

B • Refit the support to the shaft, this time in an upright position;

C • Tighten the two screws to secure.

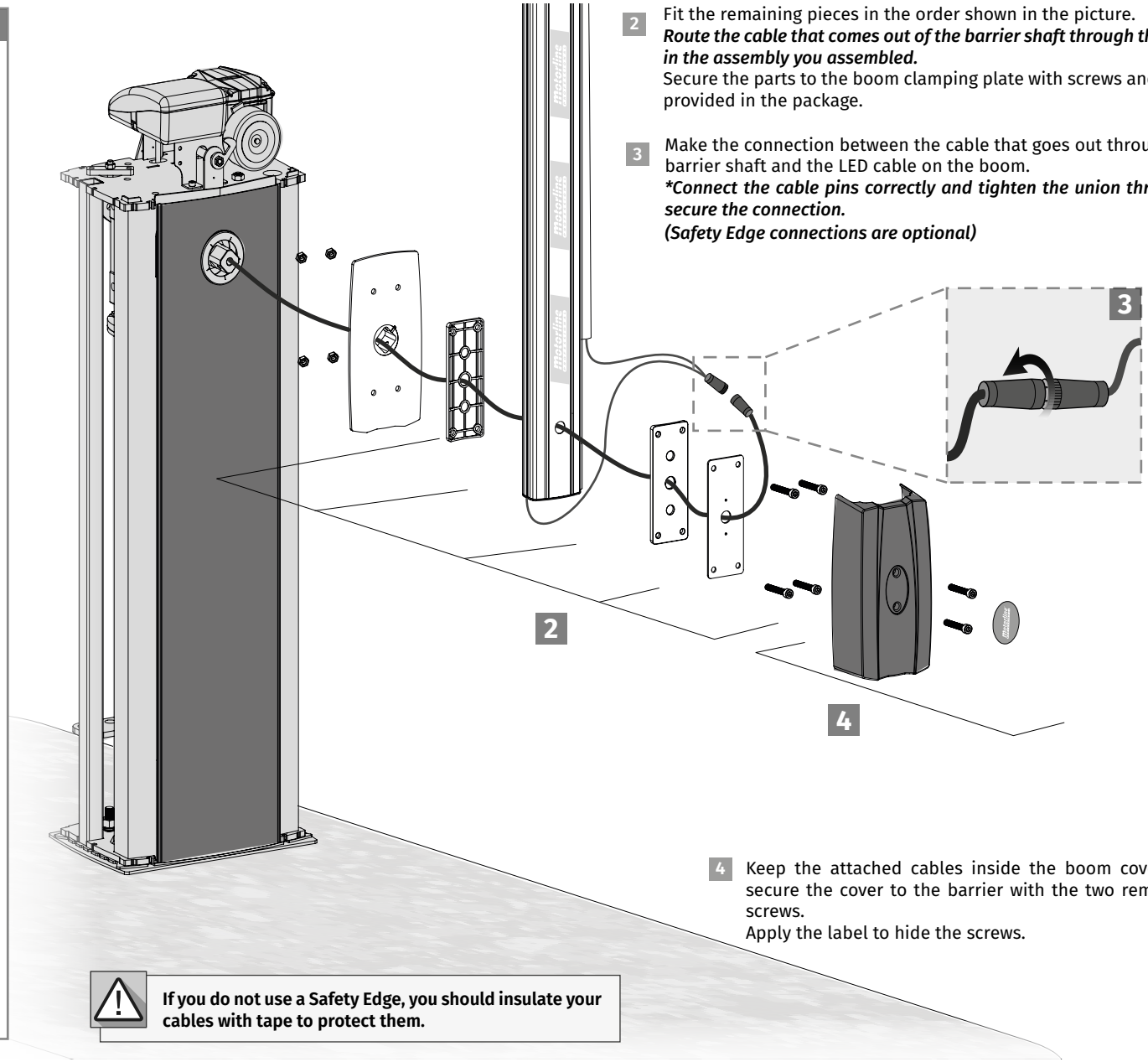

2 Fit the remaining pieces in the order shown in the picture.
Route the cable that comes out of the barrier shaft through the hole in the assembly you assembled.
Secure the parts to the boom clamping plate with screws and bolts provided in the package.

3 Make the connection between the cable that goes out through the barrier shaft and the LED cable on the boom.
Connect the cable pins correctly and tighten the union thread to secure the connection.
(Safety Edge connections are optional)

4 Keep the attached cables inside the boom cover and secure the cover to the barrier with the two remaining screws.
Apply the label to hide the screws.

If you do not use a Safety Edge, you should insulate your cables with tape to protect them.

FIX BOOM SUPPORTS

• SET EXTENDABLE BOOM LENGTH

1 You should now set its length so that you can then place the support as shown in the image below. ***The boom should exceed the position of the support arm by 50mm.***

2 After placing the boom to the desired size, secure it with the two self-tapping screws to the fixed part of the boom.

• ADJUSTING SUPPORT (FIXED) HEIGHT

If the height of the support arm is misaligned to the height of the boom you will have to adjust the arm height. To do this follow these steps:

6 Loosen the support arm locking pin with a hex wrench

7 Raise or lower the support arm to place the support to the height necessary to support the barrier.

8 Tighten the support arm lock pin with to lock the support in the set position.

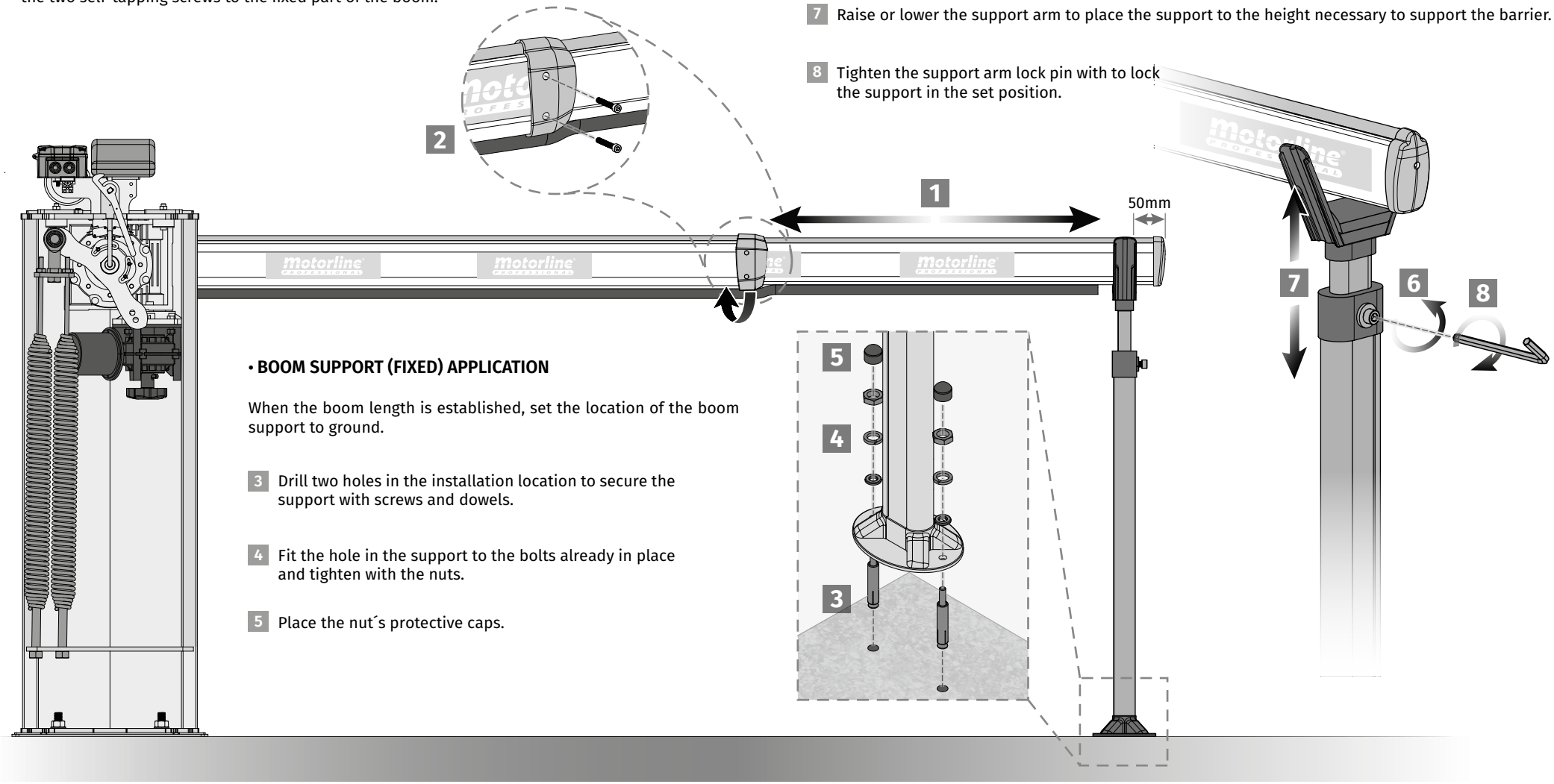

• BOOM SUPPORT (FIXED) APPLICATION

When the boom length is established, set the location of the boom support to ground.

3 Drill two holes in the installation location to secure the support with screws and dowels.

4 Fit the hole in the support to the bolts already in place and tighten with the nuts.

5 Place the nut´s protective caps.

ADJUST THE SPRINGS

Before adjusting the springs, manually place the boom in a vertical position so that the springs are in the lowest tension position (see page 5B).

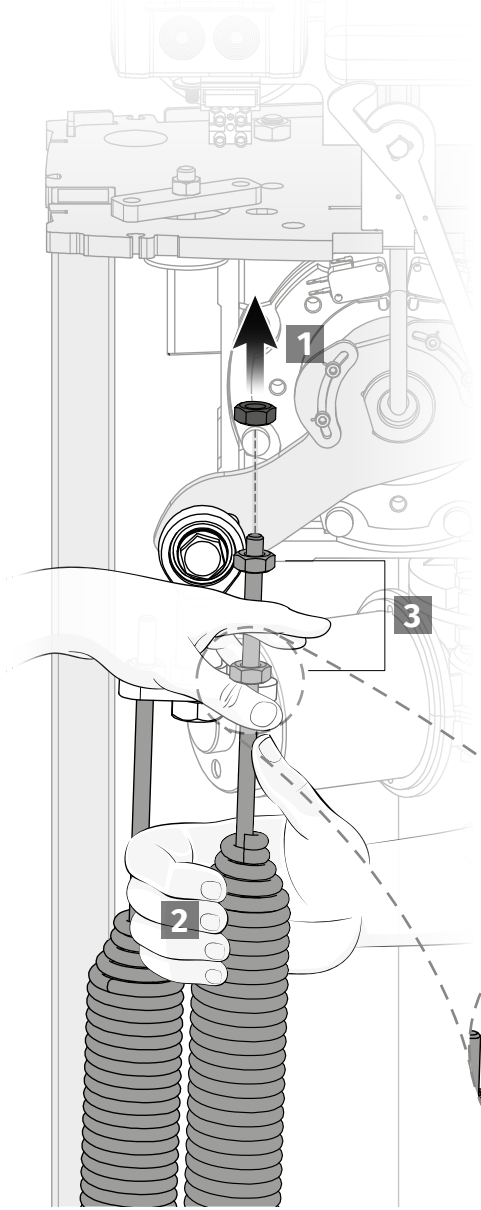

In the threaded rod of each spring, there are two nuts:

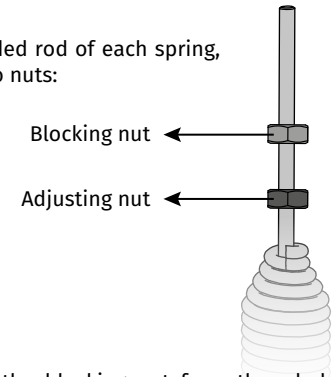

1 Remove the blocking nut from threaded rod from each spring, and keep it until the end of adjusting.

2 With your hand, pull the threaded rod upwards, in order to keep the spring stretched, but without tension.

3 Keeping the spring in this stretched position by hand, tighten the adjusting nut until it touches the plate.
This is the initial position for spring adjusting.

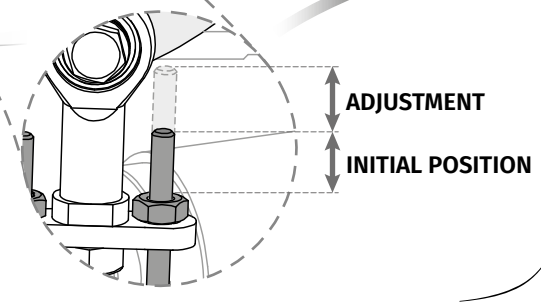

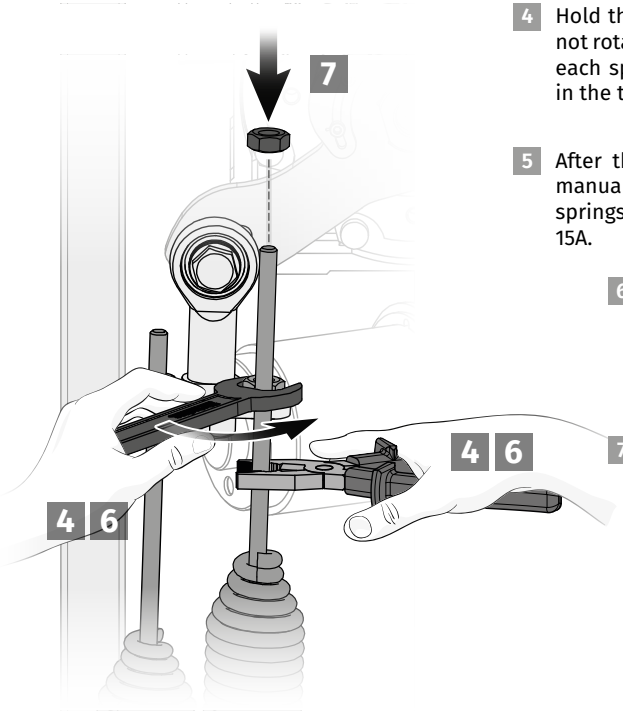

4 Hold the threaded rod with pliers so that it does not rotate, and then tighten the adjusting nut until each spring is stretched the distance mentioned in the table on page 14.

5 After the spring (s) is stretched, deactivate the manual mode and test the balance between springs and boom, performing the test on page 15A.

6 If the boom is not balanced, tighten or loosen the adjusting nut to achieve the best possible balance.

7 After each spring is adjusted, tighten the blocking nut until it touches the adjusting nut. This will lock the adjusting position to ensure that the springs do not misfit.

• ADJUSTING EXAMPLE

**** In this example, a 5.5M BOOM WITH RUBBER AND SPAT is considered, which needs a 55mm adjustment (see tables on page 14), where the M8 threaded rod starts 20mm above the support plate (INICIAL POSITION).***

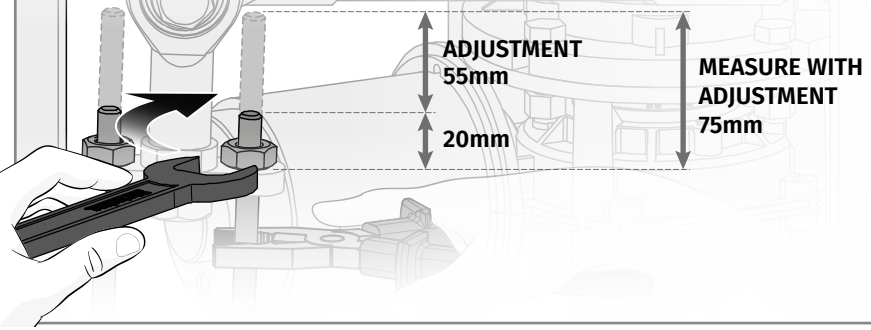

ADJUSTING TABLES

• **LEVER HOLES**

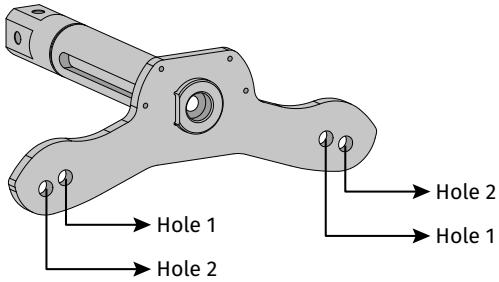

SIGMA - X4

	SIMPLE BOOM		
	4000	**3500**	**3000**
Amount	1 spring		
Adjustment	55mm	30mm	5mm
Hole	Hole 1	Hole 1	Hole 1

	BOOM WITH RUBBER		
	4000	**3500**	**3000**
Amount	1 spring		
Adjustment	35mm	15mm	20mm
Hole	Hole 2	Hole 2	Hole 1

	BOOM WITH SPAT		
	4000	**3500**	**3000**
Amount	1 spring		
Adjustment	55mm	30mm	35mm
Hole	Hole 2	Hole 2	Hole 1

	BOOM WITH RUBBER AND SPAT		
	4000	**3500**	**3000**
Amount	1 spring		
Adjustment	70mm	40mm	45mm
Hole	Hole 2	Hole 2	Hole 1

SIGMA - X6

	SIMPLE BOOM			
	6000	**5500**	**5000**	**4500**
Amount	2 springs			
Adjustment	70mm	50mm	35mm	20mm
Hole	Hole 1	Hole 1	Hole 1	Hole 1

	BOOM WITH RUBBER			
	6000	**5500**	**5000**	**4500**
Amount	2 springs			
Adjustment	50mm	30mm	50mm	30mm
Hole	Hole 2	Hole 2	Hole 1	Hole 1

	BOOM WITH SPAT			
	6000	**5500**	**5000**	**4500**
Amount	2 springs			
Adjustment	60mm	40mm	60mm	40mm
Hole	Hole 2	Hole 2	Hole 1	Hole 1

	BOOM WITH RUBBER AND SPAT			
	6000	**5500**	**5000**	**4500**
Amount	2 springs			
Adjustment	75mm	55mm	37mm	50mm
Hole	Hole 2	Hole 2	Hole 2	Hole 1

TESTING SPRING ADJUSTMENT

The motor must remain unlocked to perform the tuning test.

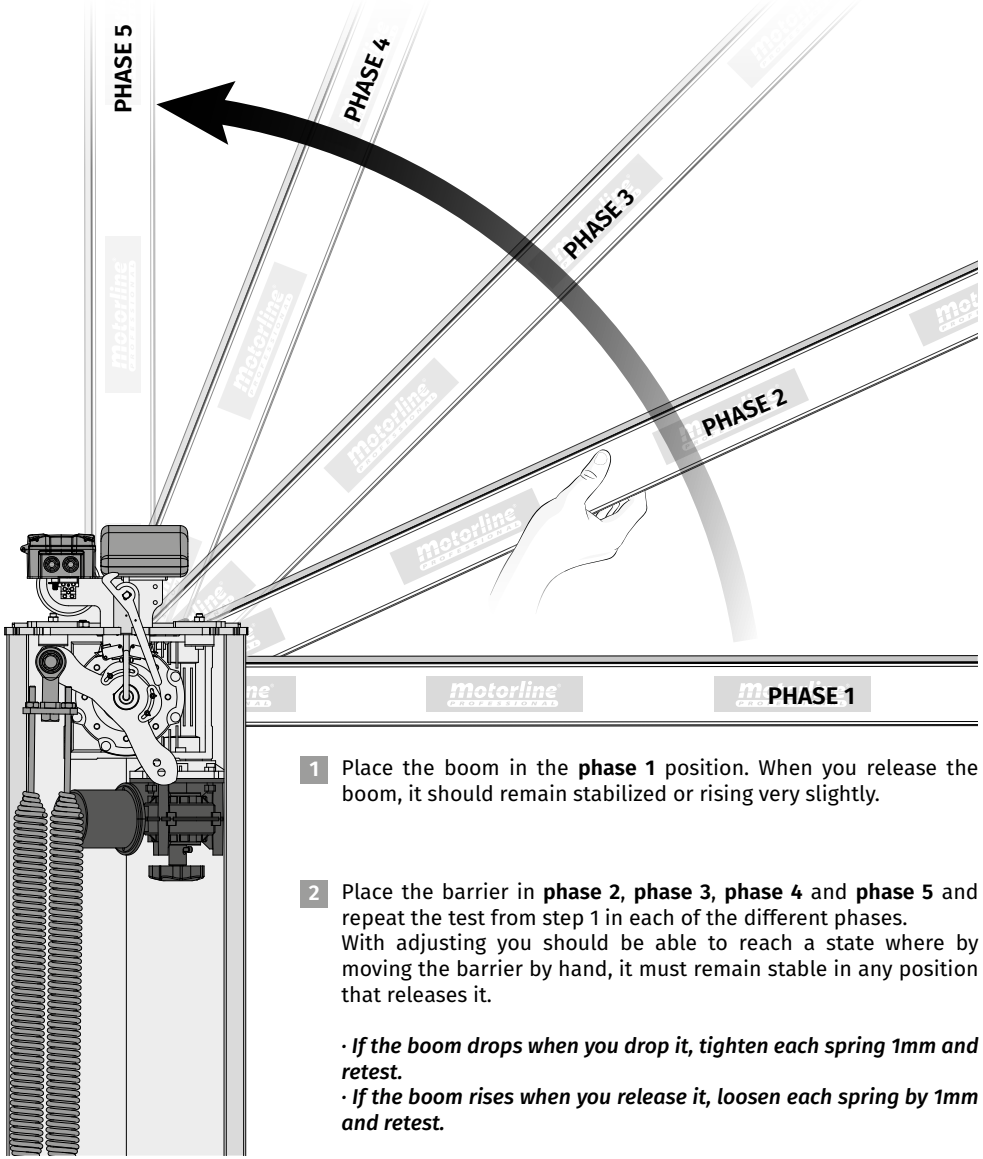

1 Place the boom in the **phase 1** position. When you release the boom, it should remain stabilized or rising very slightly.

2 Place the barrier in **phase 2**, **phase 3**, **phase 4** and **phase 5** and repeat the test from step 1 in each of the different phases.
With adjusting you should be able to reach a state where by moving the barrier by hand, it must remain stable in any position that releases it.

· If the boom drops when you drop it, tighten each spring 1mm and retest.
· If the boom rises when you release it, loosen each spring by 1mm and retest.

POWER CABLE

**** The barrier structure has a tube located on the inside so that it can lead the supply wiring to the connectors (top of the barrier).***

1 Route the power cables that come from the ground through the inside of the tube.

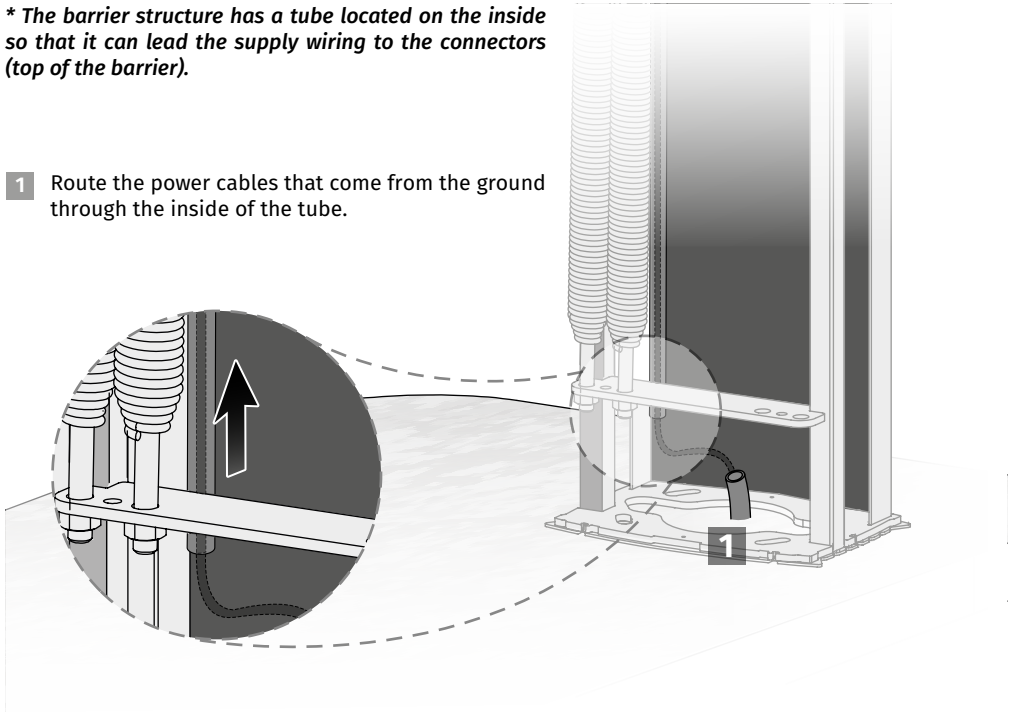

2 When the power cable reaches the barrier surface, connect the wires with the connector on the electronics support plate.
Connect Ground Wire to the middle connector as shown.

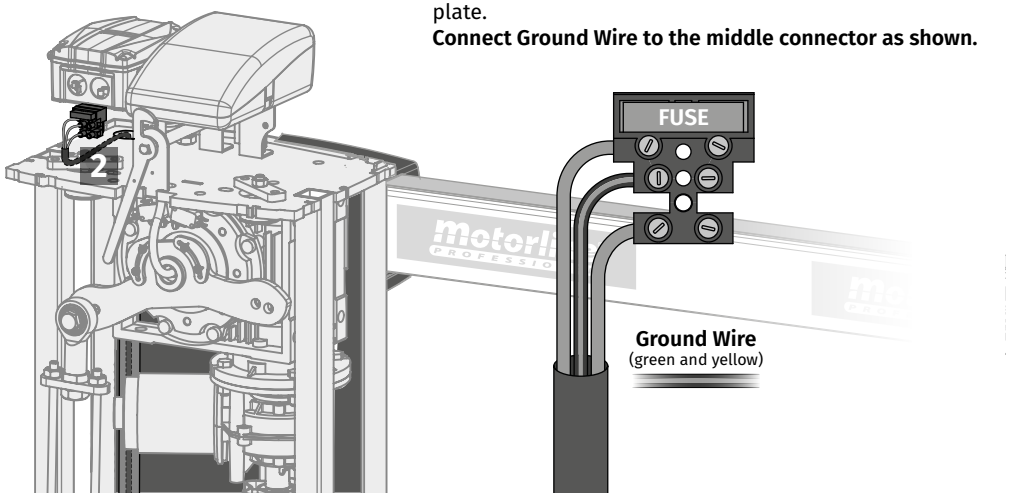

ADJUST STOPPERS

The stoppers in the barrier are visible in the image of the ceiling.
• They consist of 2 adjusting screws (one on each side of the barrier) fastened to the base as well as its 2 stoppers.
• Each screw has a blocking nut.

> When the boom opens and closes, the lever should always touch the rubber stoppers on the top plate of the barrier.

Follow the steps below to adjust the position of the stoppers:

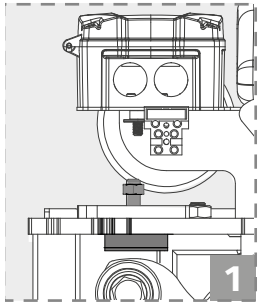

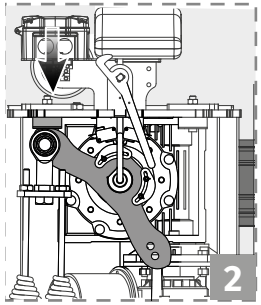

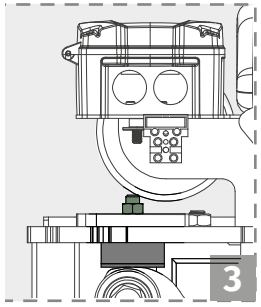

1. Relieve the blocking nut from the stopper you want to adjust.
2. Place the boom in the desired horizontal position and turn the closing stopper until it touches the lever.
3. Place the boom in the desired vertical position and turn the opening stopper until it touches the lever.
4. Test the movement of the boom and make the final adjustments.
5. Retighten the blocking nut to lock the stoppers in that position.
6. You can now adjust the limit switches.

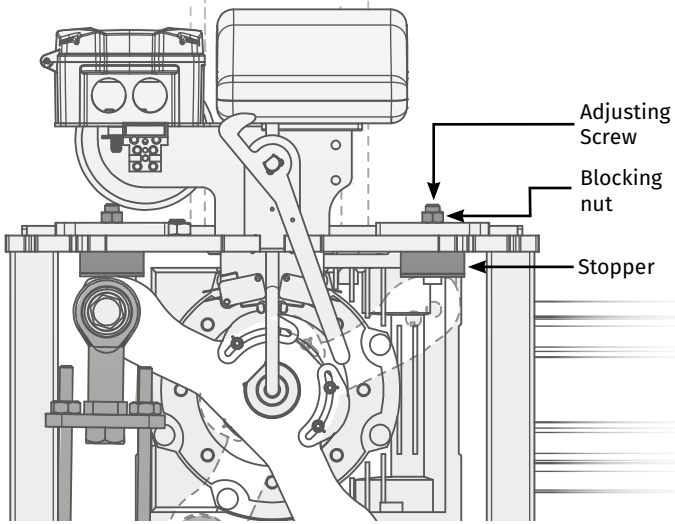

FINE-TUNING THE LIMIT SWITCHES

The SIGMA-X has limit switches to complete the opening and closing maneuvers, located on the rotation lever.

> These micros **must be adjusted** to be activated the instant before the lever touches the stopper.

Follow the steps below to fine-tune the limit switches:

1. Place the boom in a horizontal position.
2. Slightly loosen the screws on the activation plate, and move it until you hear the click of activation of the micros.

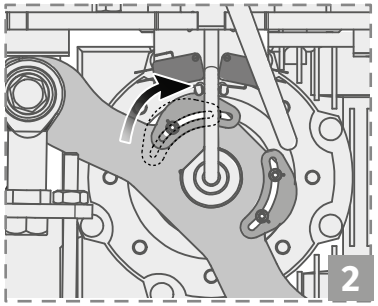

3. Tighten the screws to lock the plate in that position.
4. Place the boom in the vertical, and repeat steps 2 and 3 for the other activation plate.
5. Test the movement of the boom to ensure that the micros are being properly activated, and if necessary, adjust again.

> The limit switches are fine-tuned if you hear the **"click"** of the micros exactly in the instant before the lever touches the stopper.

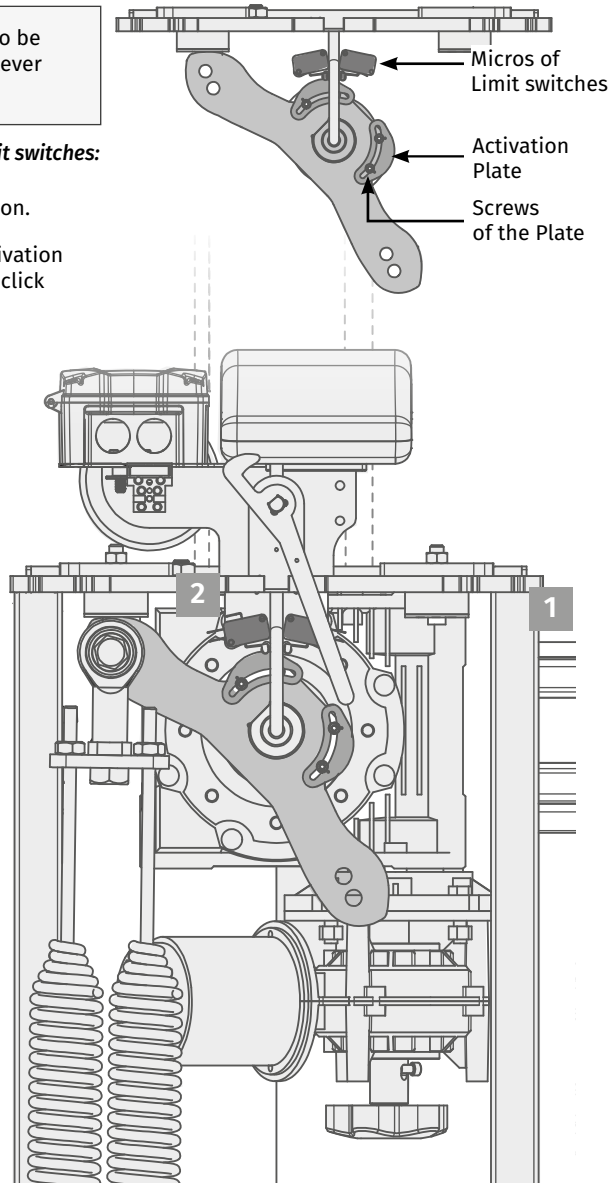

APPLY PROFILES AND COVER

• APPLY PROFILES

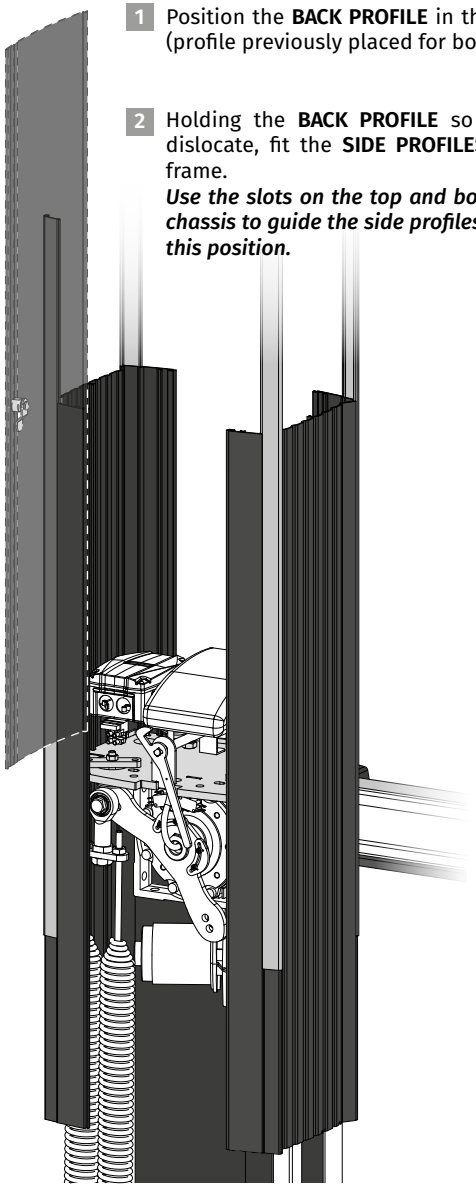

1 Position the **BACK PROFILE** in the correct location (profile previously placed for boom application).

2 Holding the **BACK PROFILE** so that it does not dislocate, fit the **SIDE PROFILES** into the barrier frame.
Use the slots on the top and bottom plates of the chassis to guide the side profiles and keep them in this position.

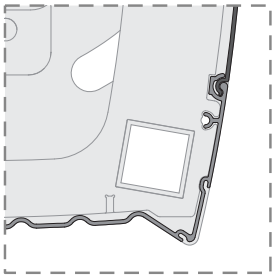

3 Insert the **DOOR** over it by placing it 90 ° with the front side of the barrier and fitting it into the slot along the **SIDE PROFILE**.

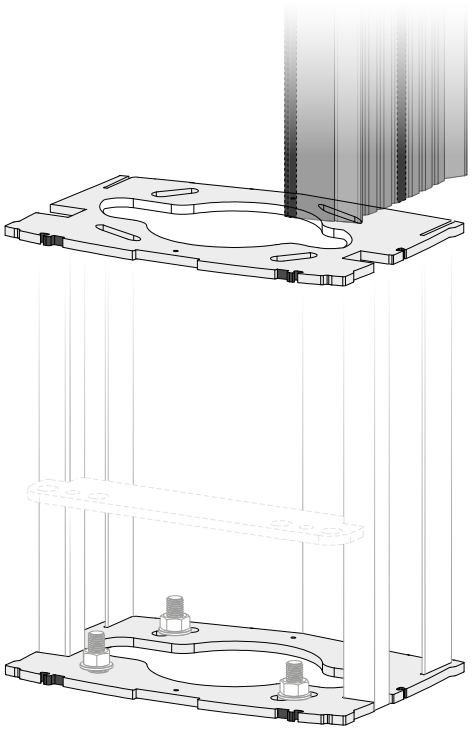

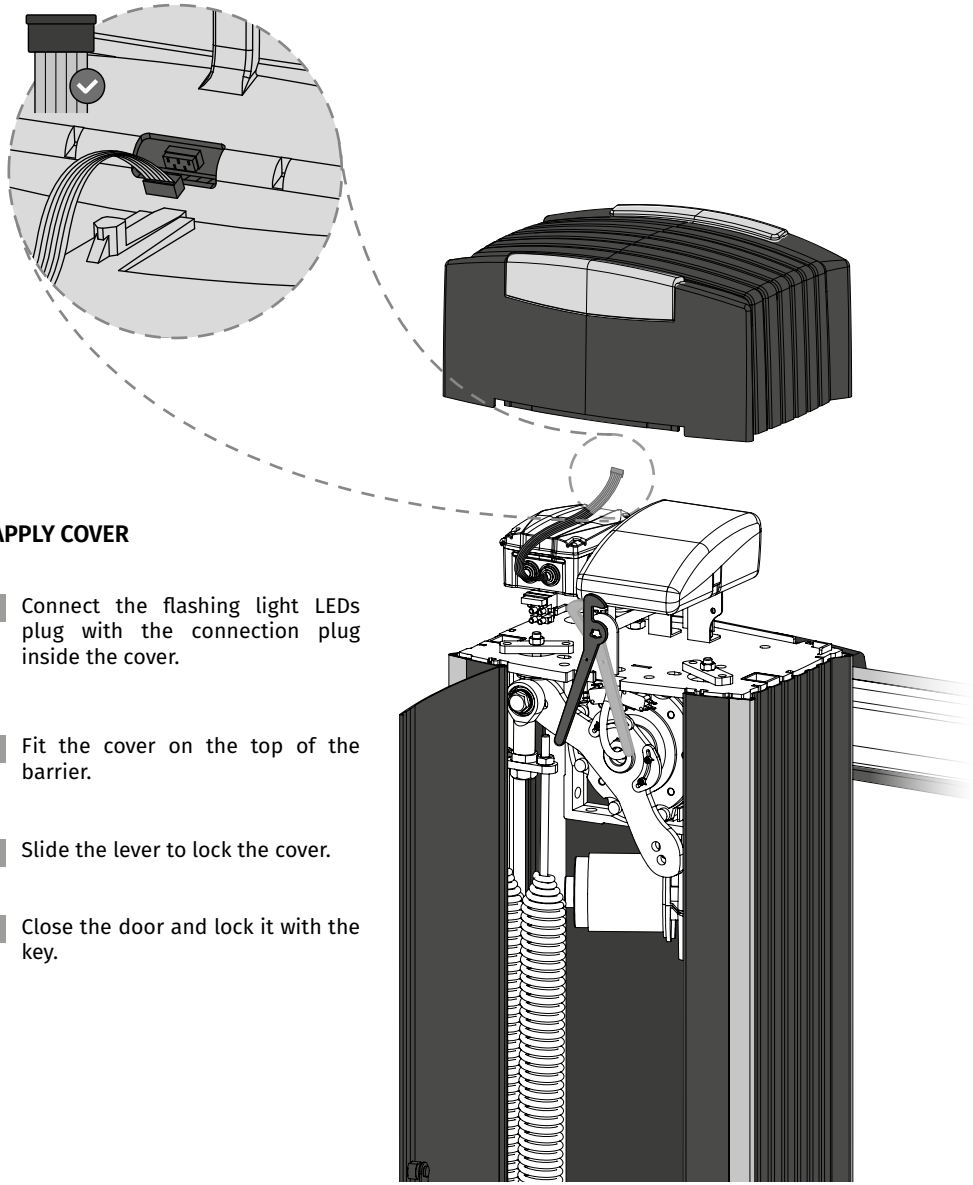

• APPLY COVER

4 Connect the flashing light LEDs plug with the connection plug inside the cover.

5 Fit the cover on the top of the barrier.

6 Slide the lever to lock the cover.

7 Close the door and lock it with the key.

MOTOR AND FLASHING LIGHT CONNECTIONS

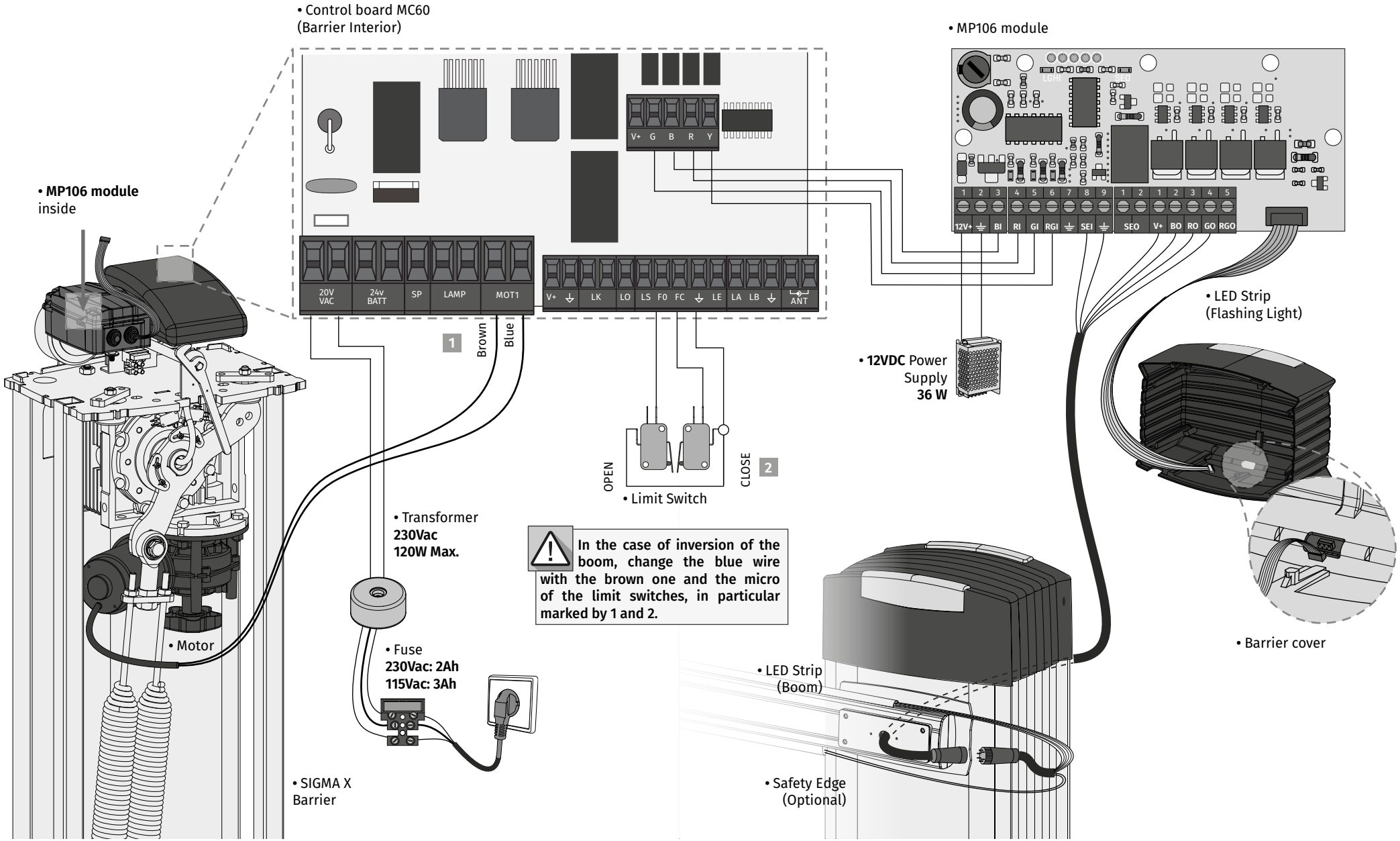

PHOTOCELL CONNECTIONS AND SAFETY EDGE

• **WITHOUT SAFETY EDGE**

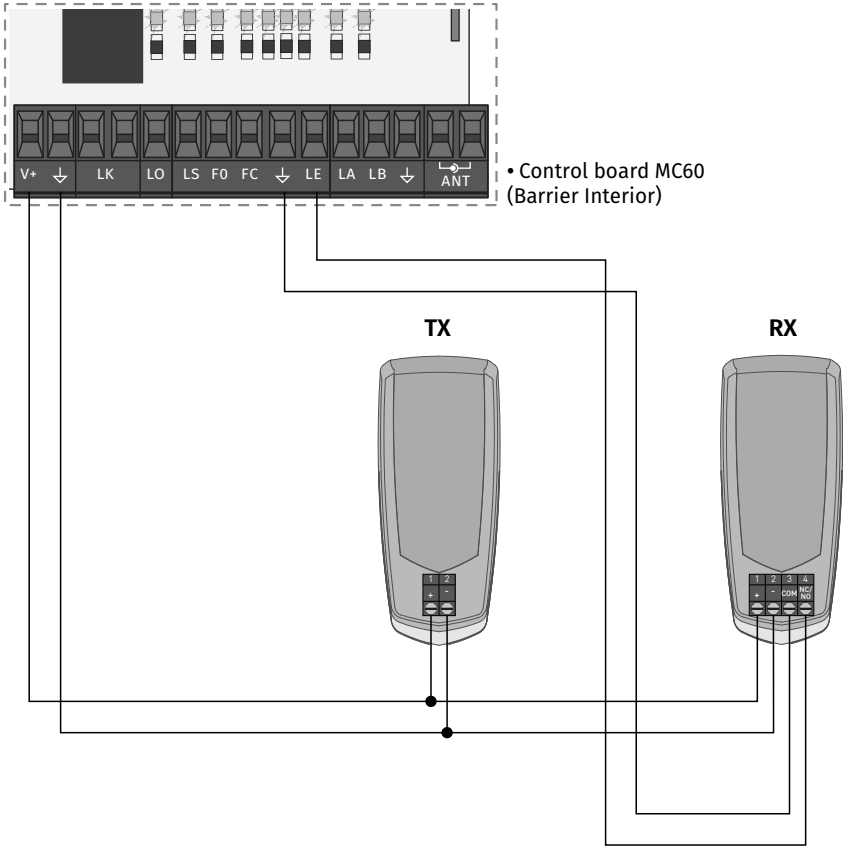

• **WITH SAFETY EDGE (SERIAL CONNECTION)**

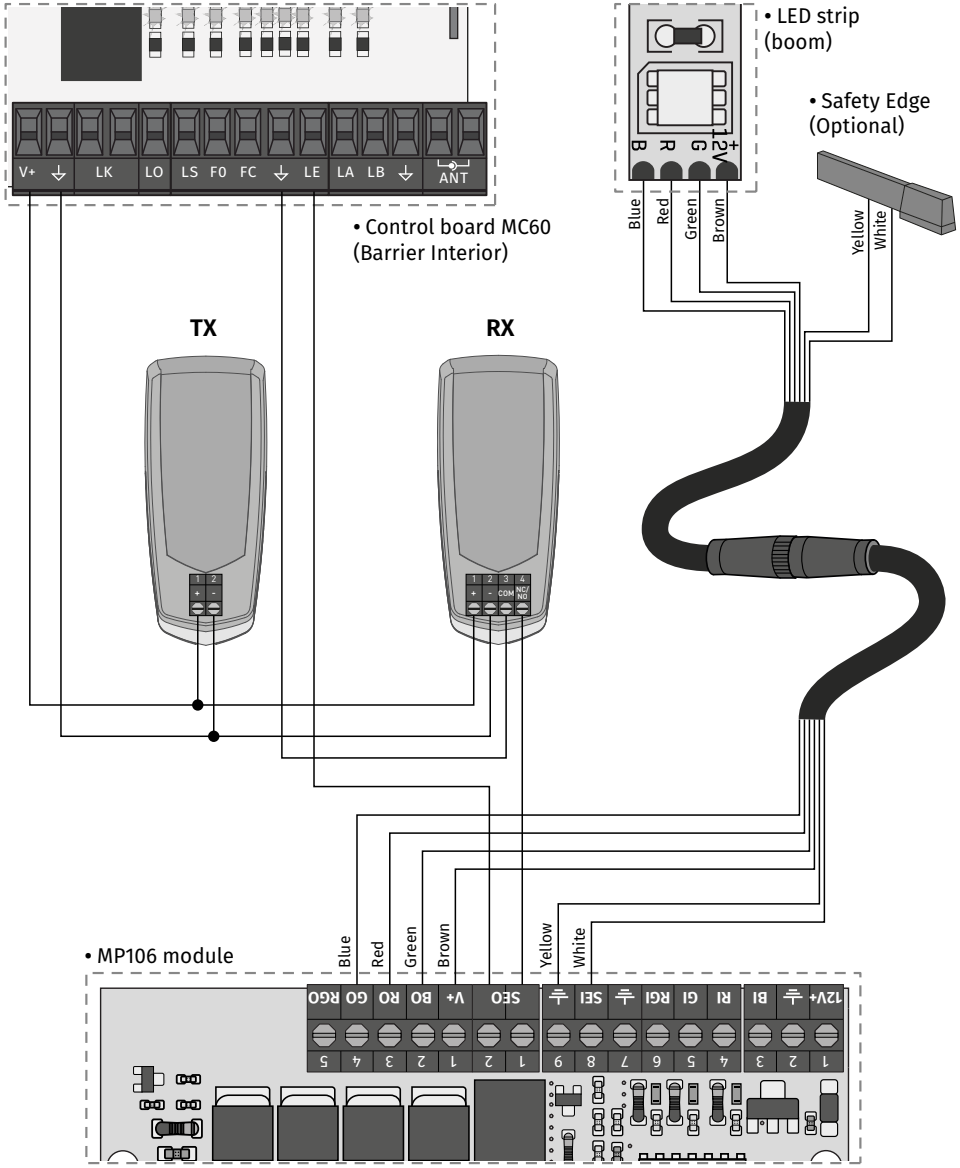

05. TROUBLESHOOTING

INSTRUCTIONS FOR FINAL CONSUMERS / SPECIALIZED TECHNICIANS

Anomaly	Procedure	Behavior	Procedure II	Discovering the origin of the problem
• Barrier doesn't work	• Make sure you have 230V power supply connected to automation and if the fuse working properly.	• Still not working	• Consult a qualified technician.	**1** • Remove the barrier top cover; **2** • Measure the 24V output of the transformer to detect the fault location; **A) Has 24V:** **1** • Verify the control board supplies of the barrier to detect if the fault is in the motor or in the control board. Replace the damaged component or send it to the services for diagnosis and repair. **B) Has not 24V:** **1** • Verify the 230V input of the transformer. If have 230V the problem is in the transformer. If haven't 230V, the problem should be in the fusible, electric cables or in the power supply. Verify all the systems.
	• Verify the STOP	• Still not working	• Consult a qualified technician.	**1** • Give the order with remote control to open and verify the behavior of the LEDs; **2** • Check the LED signs and the limit switches connections. In case everything is correct and there is no activated micro, the LEDs have to be on. Check all the photocells circuit connections to the barrier; **3** • In the E menu, make sure the STOP is enabled (page 7B). If enabled and the circuit is not closed, the barrier will not work.
• Barrier doesn't move but makes noise	• Unlock the barrier and move by hand to check for mechanical problems.	• The barrier is stuck?	• Consult an experienced barrier expert.	**1** • Check all motion axis and associated motion systems related with the barrier, to find out what is the problem. Also check that the springs are in good condition and can support the barrier.
		• The barrier moves easily?	• Consult a qualified technician	**1** • Turn off the barrier from control board and test it on directly to a 24V battery to find out if it is damaged; **2** • If the barrier runs, the problem is in the control board. Remove it and send it to the technical services for diagnosis; **3** • If the barrier does not work, remove the motor and send it to the technical services for diagnosis.
• Barrier opens but doesn't close	1 • Check if there is any obstacle in front of the photocells; 2 • Make sure if the photocells are working. Put your hand in front and check that the relay makes the same noise. 3 • Check if any of the control devices of the barrier are jammed and sending permanent signal to control board; 4 • Check the Safety Edge connection.	• Barrier opened but didn't close again.	• Consult a qualified technician	**1** • Verify if the display is connected to confirm the existence of power supply; **2** • Verify if the photocells are powered in control board output; **3** • Access the menu on the display and disable the photocells and the STOP; **4** • Check limit switch connections. If the 2 LEDs are turned off, it means that the barrier can not operate because have the limit switches actuated. **5** • Try to close; **A) Closed:** **1** • Problem is in one of these two systems. Activate the photocells and check that the barrier closes. If close, problem will be in the STOP. Ative tin the menu and try to close the barrier to be sure. **B) Doesn't closed:** **1** • Problem is in the barrier or in the control board. Give an order to the barrier close while measuring the control board power output to the barrier. If you have 24V, the control board is working and the problem is in the barrier. **2** • If it has not power, the problem is in the control board.
• Barrier doesn't make complete route	• Unlock the barrier and move by hand to check for mechanical problems.	• Encountered problems?	• Consult an experienced barrier expert.	**1** • Check all motion axis and associated motion systems related with the barrier, to find out what is the problem. Also check that the springs are in good condition and can support the gate.
		• The barrier moves easily?	1 • Re-program the limit switches; 2 • Consult a qualified technician	**1** • Verify if the tests to the barrier were well made; **2** • Change the force of F menu until the barrier move the gate without changing the direction; **3** • This adjustment must be made in such a way that the barrier reverses when encountering an obstacle; **4** • If even at maximum force level (F9) is still the problem, test the barrier directly connected to a 24V battery to see if it has the power to open / close the barrier completely; **5** • Change the force in the F menu until the barrier move the without changing the direction;